LEGEND

- ELECTRICAL SERVICES SWITCHBOARD.
- SWITCHBOARD / CONTROL PANEL NOT PROVIDED AS PART OF THE ELECTRICAL SUBCONTRACT.
- SINGLE POWER OUTLET.
- DOUBLE POWER OUTLET.
- USB — DOUBLE POWER OUTLET C/W INTEGRAL USB CONNECTION.
- SPECIAL PURPOSE POWER OUTLET.
- SIGN CONNECTION.
- SINGLE PHASE ISOLATOR.
- THREE PHASE ISOLATOR.
- CONDUIT ROUTE.
- PIT x — ELECTRICAL PIT, TYPE AS NOTED.
- ONE-WAY LIGHT SWITCH.
- TWO-WAY LIGHT SWITCH.
- DIMMER LIGHT SWITCH.
- PD — LIGHTING CONTROL PRESENCE DETECTOR.
- SPx — LIGHTING SWITCH PANEL, TYPE x.
- CIRCUIT LINE.
- SWITCH LINE.
- xx — LIGHTING CONTROL CHANNEL REFERENCE.
- DB-x - Py — POWER CIRCUIT DESIGNATION. DENOTES DB AND CIRCUIT.
- ELECTRICAL EQUIPMENT AS NOTED.
- RK — OUTLET MOUNTED WITHIN RECESS KIT.
- CAT-6 UTP RJ45 COMMUNICATIONS OUTLET.
- CAT-6 STP RJ45 COMMUNICATIONS OUTLET.
- FUSE.
- SINGLE PHASE.
- THREE PHASE.
- CURRENT TRANSFORMER C/W REMOVABLE LINK.
- FUSE LINK.
- COMBINED FUSE SWITCH.
- CIRCUIT BREAKER.
- ISOLATOR.
- RESIDUAL CURRENT DEVICE.
- NO — CONTACTOR - NORMALLY OPEN.
- NC — CONTACTOR - NORMALLY CLOSED.
- PA CEILING RECESSED SPEAKER.
- PA HORN.
- VP — VAPE SENSOR.
- Tx — CCTV CAT-6 PLUG, TYPE AS NOTED.
- REFER TO DETAIL NOTED FOR THE AREA SHOWN HATCHED. ADDITIONAL OUTLETS & FITTINGS MAY BE SHOWN ON DETAIL.

LEGEND

- E1 — E1: RECESSED LED EMERGENCY LIGHT, WHITE.
- EX — EX: EMERGENCY LED EXIT LIGHT.
- Lx — Lx: LIGHT FITTING C/W NON-MAINTAINED EMERGENCY BATTERY PACK. TYPE AS NOTED.
- L1 — L1: 600 x 600 SURFACE LED FLAT PANEL, WHITE.
- L2 — L2: 600 x 600 PLASTER BOARD RECESSED LED FLAT PANEL, WHITE.
- L3 — L3: 600 x 300 RECESSED LED FLAT PANEL. WHITE.
- L4 — L4: RECESSED AMENITY DOWNLIGHT, WHITE.
- L5 — L5: RECESSED GENERAL USE DOWNLIGHT, WHITE.
- L6 — L6: RECESSED GENERAL USE DOWNLIGHT, WHITE.
- L7 — L7: RECESSED CLASSROOM ADJUSTABLE DALI DIMMABLE DOWNLIGHT, WHITE.
- L8 — L8: RECESSED CLASSROOM DALI DIMMABLE DOWNLIGHT, WHITE.
- L9 — L9: 2000 LONG SUSPENDED LED EXTRUSION, BLACK.
- L10 — L10: 2400 LONG SURFACE MOUNTED LED EXTRUSION LIGHT, WHITE.
- L11 — L11: LED STRIP LIGHT FIXED TO UNDERSIDE OF OVERHEAD CUPBOARD.
- L12 — L12: L-SHAPED 2400 x 2400 SUSPENDED LED EXTRUSION LIGHT, BLACK.
- L13 — L13: 1200 DIA SUSPENDED LED EXTRUSION LIGHT, BLACK.
- L14 — L14: EXISTING CARPARK LIGHT.
- L15 — L15: BOLLARD LIGHT.
- L16 — L16: FLOOD LIGHT.
- Cx — LIGHTING CONTACTOR, TYPE AS NOTED.
- PE — LIGHTING PE CELL SENSOR.
- TC — LIGHTING TIME CLOCK.
- CR — ACCESS CONTROL CARD READER.
- ESx — ACCESS CONTROL ELECTRIC STRIKE, TYPE AS NOTED.
- SECURITY STROBE / SIREN.
- SECURITY PIEZO SIREN.
- SECURITY INTRUDER DETECTOR.
- KP — SECURITY KEY PANEL.
- S — SECURITY SMOKE ALARM.
- REX — SECURITY EXIT PUSH BUTTON.
- SSP — SECURITY SWITCH PANEL.
- CL — FULL LOAD BREAK CONTACTOR.
- DL — SOLAR DATA LOGGER.
- GPR — WIRELESS PROTECTION RELAY.
- GSD — SOLAR GENERATION SIGNALLING DEVICE.
- INV — SOLAR SYSTEM INVERTER.
- SM — SOLAR SMART METER.
- Mx — METER, TYPE AS NOTED.
- SPD — SURGE PROTECTION DEVICE.

NOTE

ALL ELECTRICAL PENETRATIONS THROUGH THE ROOF SHEETING ARE TO BE IN LINE WITH THE STRUCTURAL OR MECHANICAL SERVICES PENETRATIONS TO AVOID DEDICATED FLASHINGS FOR THE ELECTRICAL SERVICES.

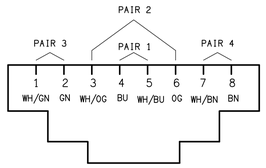

SCHEMATIC

RJ45 PINOUT CONFIGURATION

NOT TO SCALE

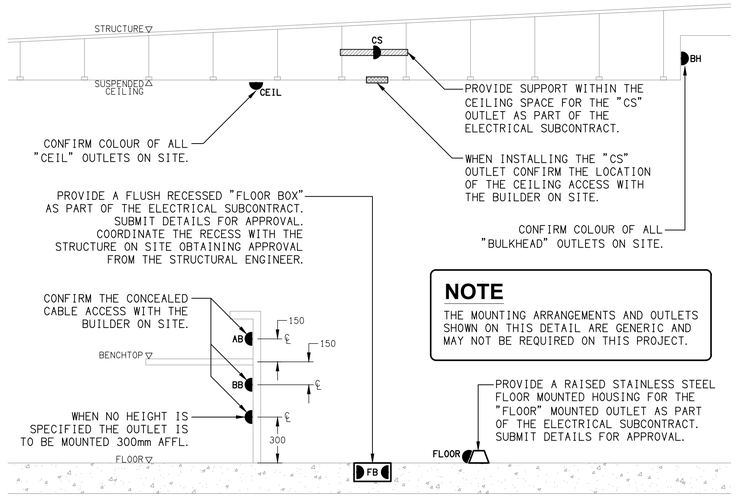

NOTE

THE MOUNTING ARRANGEMENTS AND OUTLETS SHOWN ON THIS DETAIL ARE GENERIC AND MAY NOT BE REQUIRED ON THIS PROJECT.

DETAIL

TYPICAL OUTLET MOUNTINGS

NOT TO SCALE

EQUIPMENT:

TEST - TEST PUSH BUTTON MOUNTED ON THE DISTRIBUTION BOARD ESCUTCHEON.

RESET - RESET PUSH BUTTON MOUNTED ON THE DISTRIBUTION BOARD ESCUTCHEON.

LAMP - AMBER TEST INDICATING LAMP MOUNTED ON THE DISTRIBUTION BOARD ESCUTCHEON.

Ta - ADJUSTABLE 0-3 HOUR TIMED RELAY.

Tb - 15 MINUTE RUN-ON TIMER TO OPERATE UPON THE RETURN OF MAINS POWER.

Cx - CONTACTOR x.

CRx - CONTROL RELAY x.

Rx - RELAY x.

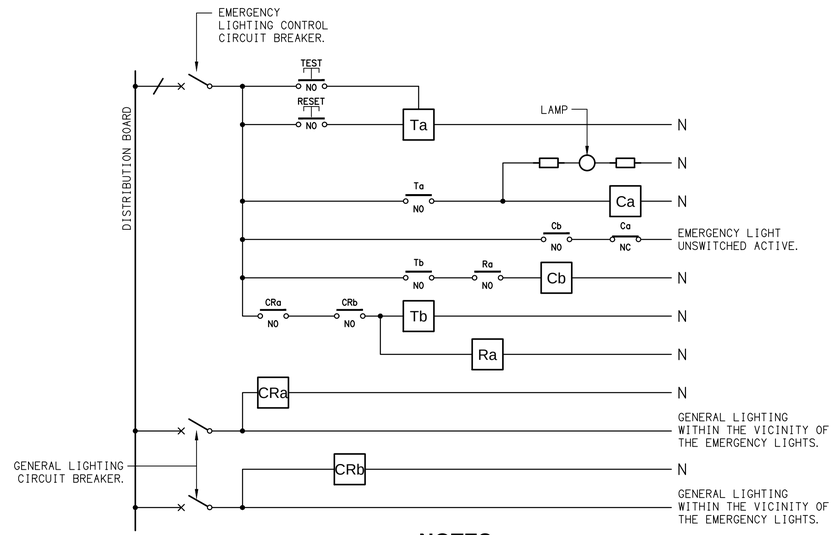

NOTES

1. THE EMERGENCY LIGHT UNSWITCHED ACTIVE / GENERAL LIGHTING SWITCHED ACTIVE CIRCUIT ARRANGEMENT AND CONTROL IS TYPICAL FOR ALL CIRCUITS SUPPLYING EMERGENCY LIGHTS.

2. PROVIDE ADDITIONAL CONTROL RELAYS (CRx) CONFIGURED AS PER CRa AND CRb FOR ALL ADDITIONAL LIGHTING CIRCUITS THAT SUPPLY LIGHTS IN THE VICINITY OF THE EMERGENCY LIGHTS.

SCHEMATIC

EMERGENCY LIGHTING

NOT TO SCALE

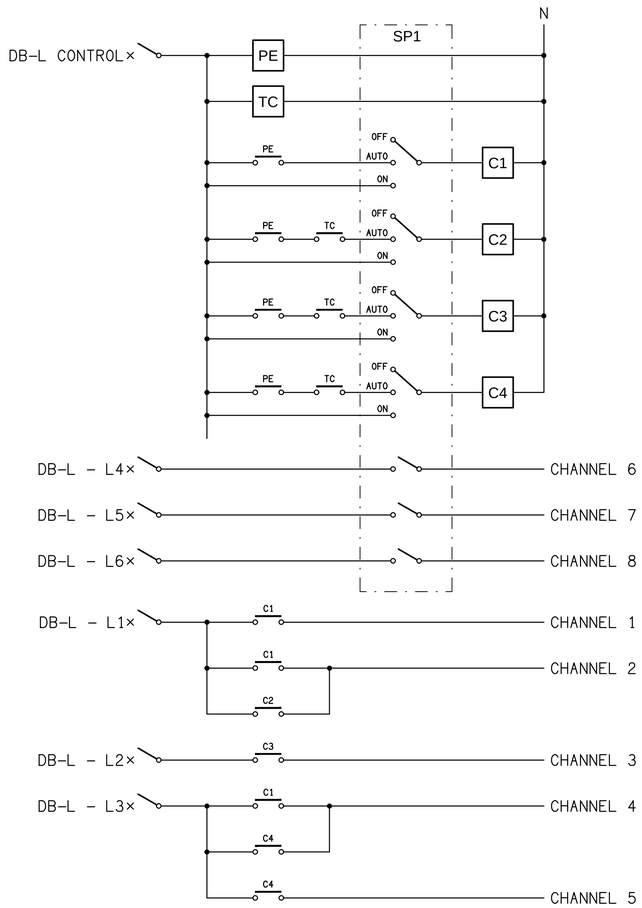

SCHEMATIC

LIGHTING CONTROL CONFIGURATION

NOT TO SCALE

REV:	DESCRIPTION:	DATE:
D	TENDER	26/10/2026

ELECTRICAL DESIGN GROUP BRISBANE PTY LTD
ACN 092 710 793

TRADING AS:
ELECTRICAL DESIGN GROUP

THE COPYRIGHT OF THIS DRAWING REMAINS THE PROPERTY OF THE ELECTRICAL DESIGN GROUP.

USE FIGURED DIMENSIONS IN PREFERENCE TO SCALE.

ALL DIMENSIONS TO BE VERIFIED ONSITE.

ELECTRICAL DESIGN GROUP
ELECTRICAL BUILDING SERVICES CONSULTANTS
BRISBANE GOLD COAST
P.O.Box 15, Sherwood Q.4075
Phone: (07) 3278 4375
Email: brisbane@edg.net.au
Web: www.edg.net.au

PROJECT:
KINGS CHRISTIAN COLLEGE WALLOON
ELC WAL02

KARRABIN ROSEWOOD ROAD, WALLOON

DRAWING:
ELECTRICAL SERVICES
LEGEND & DETAILS

SCALE:	PROJECT NO:	DRAWING NO:	REVISION:
NOT TO SCALE AT A1	C3827a	E01	D